LCC Pico Node User Guide

Version 2.8

This version utilizes the MCP2815 and MCP2562 discrete hardware components (chips) for the LCC interface.

The intent of this node is to control 16 pins on two 10 pin IDC connectors for a model railroad layout. It differs from the 2.7 board by the pin assignments. The higher GPIO pins are used for the second IDC connector making the analog pins usable for node peripherals. While it will work with either the Pico or Pico2, the latter is recommended due to enhanced capabilities.

There are no resistors on the Reset, Blue, and Gold button lines other than for the Blue and Gold LEDs.

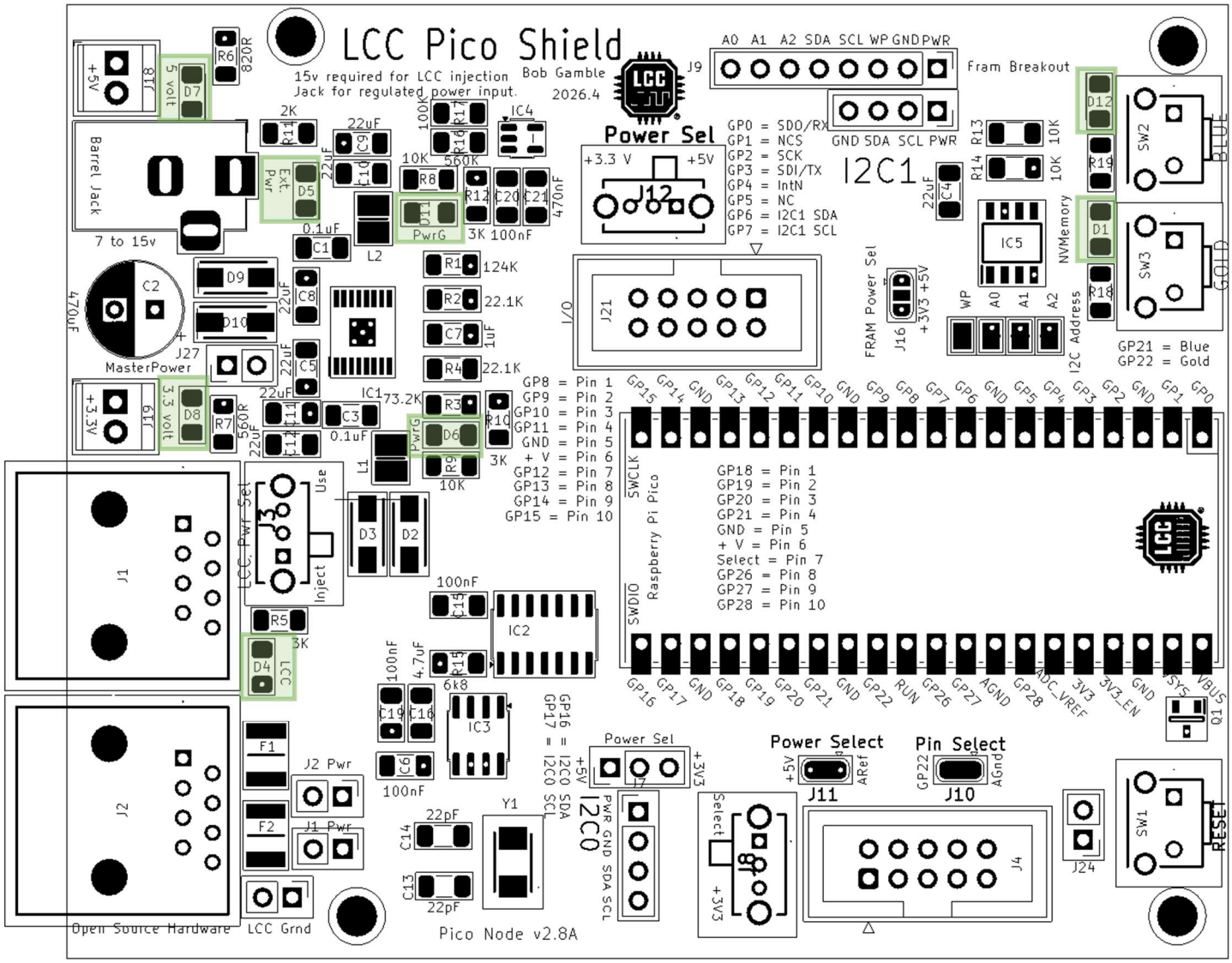

The node may be powered from the barrel jack or the LCC port. The barrel jack power should be at least seven (8) volts to power the microcontroller or fifteen (15) volts [or your preferred LCC voltage] if using the node to inject power to LCC. Amperage should be sufficient to drive any external devices plus about half an amp for the node plus another 1.5 amps if injecting power to LCC. There are six power LEDs. Five should be lit to indicate that the node is properly powered, six if barrel jack powered.

Node power configuration is accomplished with five jumpers located behind the LCC ports.

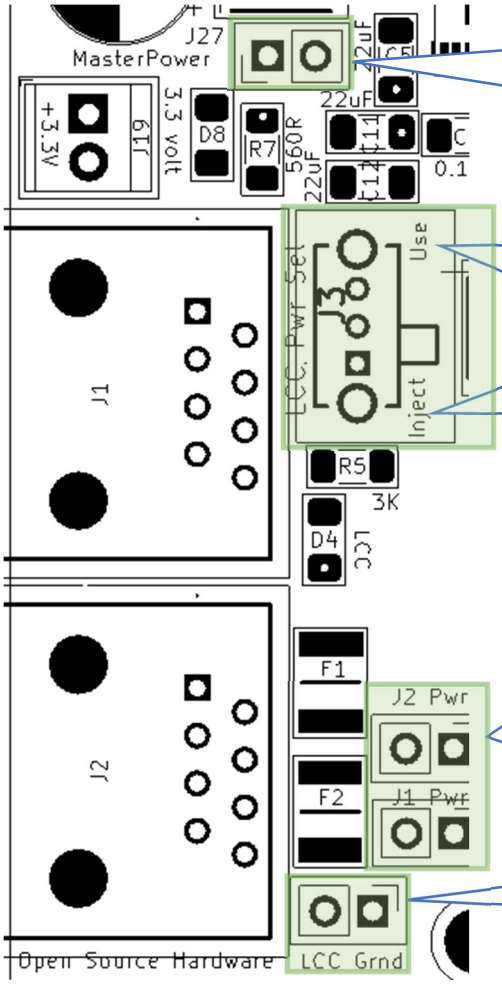

Master Power jumper should be bridged to power the node. A normally closed button may be plugged in here as a means to do a hardware reset should there be a problem with the power initialization due to a slow ramping power supply.

LCC Pwrd jumper should be selected along with the LCC Grnd jumper if the node is to be powered from the LCC Port. Note that this will not provide power to the stepper driver which is powered exclusively from the barrel jack.

Inject Power should be selected along with the LCC Grnd jumper if the node is intended to inject power to one or both of the LCC ports. 15 volts of at least 1.5 amps should be applied to the barrel jack in order to inject power.

J1 Pwr and J2 Pwr jumpers allow power isolation of one or both LCC ports. Generally, both jumpers would be bridged. If power injection or utilization was only desired in one direction, then the opposing jumper would be opened to isolate that leg. The isolated leg should be powered downstream as opening the jumper will cut off any power from the node.

LCC Grnd jumper should be bridged if the node is intended to inject power to or draw power from one or both of the LCC ports.

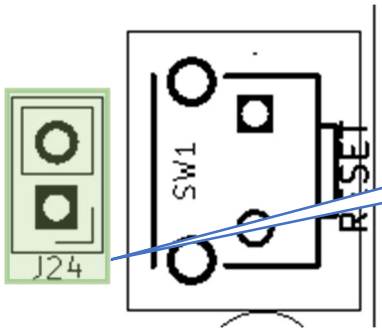

J24 jumper may be attached to a normally open button to function as a Reset as it is in parallel to the on board Reset button.

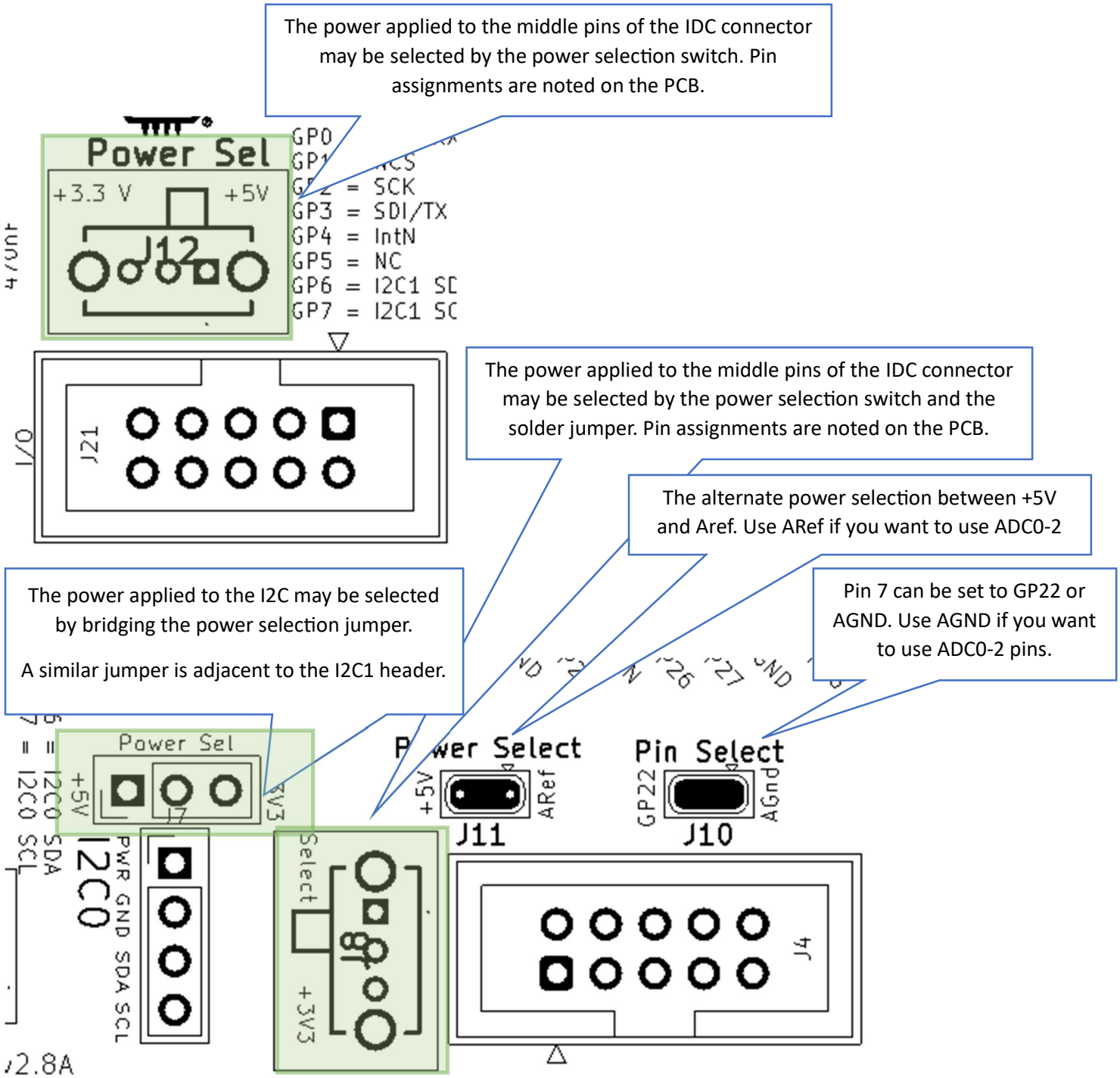
The power applied to the middle pins of the IDC connector may be selected by the power selection switch. Pin assignments are noted on the PCB.
Power Sel
+3.3 V
+5V
J12
GP0
GP3 = SDI/TX
GP4 = IntN
GP5 = NC
J21
The power applied to the middle pins of the IDC connector may be selected by the power selection switch and the solder jumper. Pin assignments are noted on the PCB.
The alternate power selection between +5V and Aref. Use ARef if you want to use ADC0-2
The power applied to the I2C may be selected by bridging the power selection jumper.
A similar jumper is adjacent to the I2C1 header.
Pin 7 can be set to GP22 or AGND. Use AGND if you want to use ADC0-2 pins.
Power Sel
+5V
3V3
J7
I2C0
PWR GND SDA SCL
Select
J8
+3V3
Power Select
+5V
ARef
J11
Pin Select
GP22
AGnd
J10
J4

NVM Storage

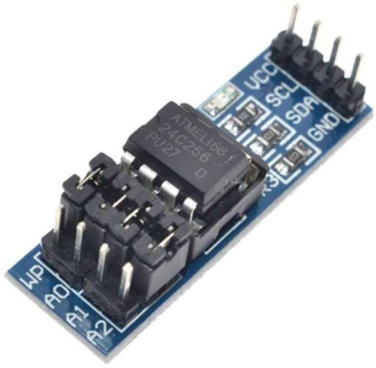

External NVM may be attached to either the I2C1 header, the FRAM Breakout header, or soldered down to the IC5 footprint. If either of the latter two choices are used, the I2C Address jumpers may be used to select non-default addresses or implement write protection. Otherwise, these would be functions of the module plugged into the I2C1 header.

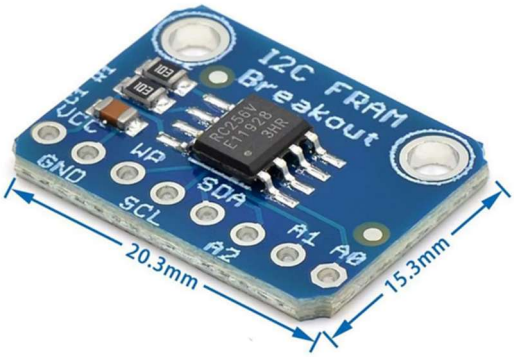

A typical part would be a module utilizing an AT25C256 chip (left) or RC256V FRAM (right).

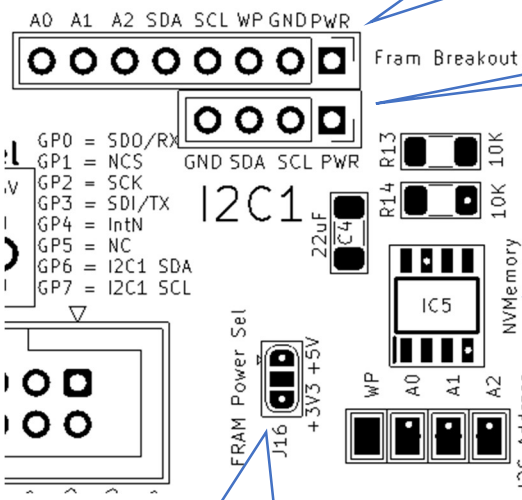

An Adafruit FRAM breakout board may be attached to this header.

I2C modules including NVM may be attached to this header.

I2C nonvolatile memory may be populated if desired to reduce strain on the Pico flash. Parts compatible with these should work.

BR24G512F-3AGTE2	I2C BUS(2-Wre) 512K
MB85RC256VPF-G-BCERE1	256kbit FRAM with I2C

I2C address may be selected by the lower three pairs of headers. The selection will apply to the soldered NVM module or FRAM Breakout header

Either 3.3V or 5V may be selected by this solder jumper. The selection will apply to the soldered NVM module, I2C1, and FRAM Breakout header.

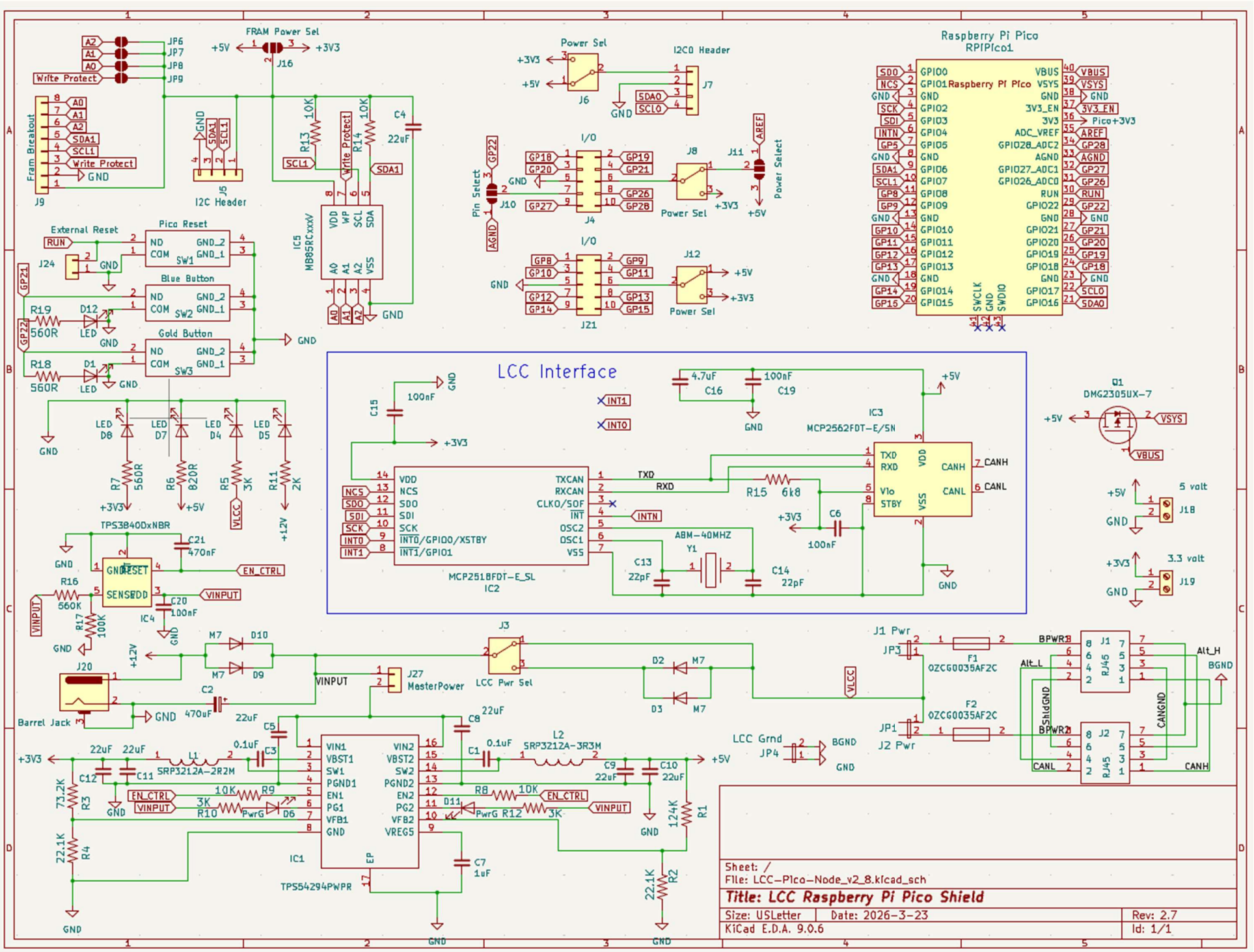
Raspberry Pi Pico
RPIPico1
Raspberry Pi Pico
LCC Interface
FRAM Power Sel
Power Sel
I2C0 Header
I2C Header
Fram Breakout
Write Protect
External Reset
Pico Reset
Blue Button
Gold Button
MB85RCxxxV
IC5
MCP2518FDT-E_SL
IC2
MCP2562FDT-E/SN
IC3
TPS3840DxNBR
IC4
TPS54294PWPR
IC1
LCC Pwr Sel
MasterPower
Barrel Jack
J1 Pwr
J2 Pwr
LCC Grnd
5 volt
3.3 volt
DMG2305UX-7
Q1
F1
0ZCG0035AF2C
F2
0ZCG0035AF2C
RJ45
J1
J2
Alt_H
Alt_L
BGND
CANGND
ShldGND
CANH
CANL
VINPUT
EN_CTRL
VLCC
VSYS
VBUS
Pin Select
Power Select
ABM-40MHZ
Y1
SRP3212A-2R2M
SRP3212A-3R3M
Sheet: /
File: LCC-Pico-Node_v2_8.kicad_sch
Title: LCC Raspberry Pi Pico Shield
Size: USLetter
Date: 2026-3-23
Rev: 2.7
KiCad E.D.A. 9.0.6
Id: 1/1

Bill of Materials

Qty	Value	Reference	Mfr. #	Description
6	0.1uF, 100nF	C1,C3,C6,C15,C19,C20	C1206C104K3RAC7411	Multilayer Ceramic Capacitors MLCC - SMD/SMT 25V 0.1uF X7R 1206 10%
1	470uF	C2	REF1016471M035K	Aluminum Electrolytic Capacitors - Radial Leaded Radial Leaded Aluminum Electrolytic Capacitor
7	22uF	C4,C5,C8,C9,C10,C11,C12	CL31A226MOCLNNC	Multilayer Ceramic Capacitors MLCC - SMD/SMT 22uF+/-20% 16V X5R 3 1206
1	1uF	C7	CL31B105KAHNFNE	Multilayer Ceramic Capacitors MLCC - SMD/SMT 1uF+/-10% 25V X7R 32 1206
2	22pF	C13,C14	C1206C220J3HACTU	Multilayer Ceramic Capacitors MLCC - SMD/SMT 25V 22pF X8R 1206 5%
1	4.7uF	C16	CL31B475KOHNFNE	Multilayer Ceramic Capacitors MLCC - SMD/SMT 4.7uF+/-10% 16V X7R 1206
1	470nF	C21		
6	LED	D1,D4,D5,D7,D8,D12	156120VS75000	Single Color LEDs WL-SMRW SMD RvMt Mon Wtrclr Rect 1206BtGn
4	M7	D2,D3,D9,D10	M7	Rectifiers Diode, SMA, 1000V, 1A
2	PwrG	D6,D11	156120VS75000	Single Color LEDs WL-SMRW SMD RvMt Mon Wtrclr Rect 1206BtGn
2	0ZCG0035AF2C	F1,F2	0ZCG0035AF2C	Resettable Fuses - PPTC
1	TPS54294PWPR	IC1	TPS54294PWPR	Switching Voltage Regulators 4.5-18Vin Dual 2A Ou t Sync SD Cnvrtr A A 595-TPS54294PWP
1	MCP2518FDT-E_SL	IC2	MCP2518FDT-E/SL	CAN Interface IC Stand-alone Low Power CAN FD Controller w/SPI Interface Grade1
1	MCP2562FDT-E/SN	IC3	MCP2562FDT-E/SN	CAN Interface IC CAN Flexible Data Rate Transceiver
1	TPS3840DxNBR	IC4		
1	MB85RCxxxV	IC5	BR24G512F-3AGTE2	EEPROM I2C BUS(2-Wre) 512K SOP8 EEPROM
2	RJ45	J1,J2	MTJ-880X1	Modular Connectors / Ethernet Connectors 8P8C TYPE 0 GLD FLSH BLK
1	SRP3212A-2R2M	L1	SRP3212A-2R2M	Power Inductors - SMD Ind,3.2x2.5x1mm,2.2uH+/-20%,4A, shd AEC-Q200
1	SRP3212A-3R3M	L2	SRP3212A-3R3M	Power Inductors - SMD Ind,3.2x2.5x1mm,3.3uH+/-20%,3.1A, shd AEC-Q200
1	DMG2305UX-7	Q1	DMG2305UX-7	MOSFETs P-Ch ENH FET -20V 52mOh -5A
1	124K	R1	ERA-8AEB1243V	Thin Film Resistors - SMD 1206 124Kohm 25ppm 0.1% AEC-Q200
2	22.1K	R2,R4	ERA-8AEB2212V	Thin Film Resistors - SMD 1206 22.1Kohm 25ppm 0.1% AEC-Q200
1	73.2K	R3	ERA-8AEB7322V	Thin Film Resistors - SMD 1206 73.2Kohm 25ppm 0.1% AEC-Q200
3	3K	R5,R10,R12		
1	820R	R6	RT1206FRE07820RL	Thin Film Resistors - SMD 1/4W 820 ohm 1% 50ppm
3	560R	R7,R18,R19	RT1206FRE07560RL	Thin Film Resistors - SMD 560 OHM 1% 50PPM 1/4W
4	10K	R8,R9,R13,R14		
1	2K	R11	RT1206FRE072KL	Thin Film Resistors - SMD 1/4W 2K ohm 1% 50ppm
1	6k8	R15	RT1206DRD076K8L	Thin Film Resistors - SMD 6.8 kOhms 250 mW 0.5 % 1206
1	560K	R16		
1	100K	R17		
1	Raspberry Pi Pico	RPiPico1		
1	Pico Reset	SW1	TS11-674-43-BK-160-RA-D	Tactile Switches 6 x 7.4 mm 4.3 mm 160 gf Black Right Angle Through Hole SPST
1	Blue Button	SW2	TS11-674-43-BK-160-RA-D	Tactile Switches 6 x 7.4 mm 4.3 mm 160 gf Black Right Angle Through Hole SPST
1	Gold Button	SW3	TS11-674-43-BK-160-RA-D	Tactile Switches 6 x 7.4 mm 4.3 mm 160 gf Black Right Angle Through Hole SPST
1	ABM-40MHZ	Y1	ABM3-40.000MHZ-B2-T	Crystals Xtal 5032 2-SMD 40MHz Tol +/-20ppm Stab +/-50ppm -20C - 70C 18pF 25 Ohms

Connections:

J3	Select power from LCC or Inject Power to LCC
J4, J21	10 pin IDC connector I/O
J5,J7	I2C Header
J6,J8,J12	3.3/5 Volt Power Selection
J9	Fram Breakout header
J14,J17	Pico Pinout Conn_01x20
J16	FRAM Power Select
J18	5 volt power out

J19	3.3 volt power out
J20	Barrel Jack power input
J24	External Reset header
J27	MasterPower bridge header
JP1	J2 LCC Power enable
JP3	J1 LCC Power enable
JP4	LCC Ground enable
JP6-9	NVM Address & WP

Software

Board:

The author uses the RP2040 board library by Earle Philhower

https://arduino-pico.readthedocs.io/en/latest/install.html

For LCC support:

https://github.com/openlcb/OpenLCB_Single_Thread

Or

https://github.com/JimKueneman/OpenLcbCLib

CAN Hardware:

ACAN2517 Arduino library.

External Storage:

I2C_EEPROM Arduino library by Rob Tillaart

FRAM_I2C Arduino library by Rob Tillaart

NeoPixel:

NeoPixelBus by Makuna Arduino library (preferred)

Or

NeoPixelConnect Arduino library by Alan Yorinks.

Other preferred libraries for the RPi Pico:

Display

```
#include <TFT_eSPI.h>      // Hardware-specific display library

#include "my_bb_captouch.h"    //capacitive touch driver
```

Servos

```
#include <ServoEasing.hpp>  // great library for getting slow servo action, including bounces

#include <PCA9685_servo_driver.h>

#include <PCA9685_servo.h>
```

Stepper Motor

```
#include "AccelStepper.h"          // by Mike McCauley
```